028595

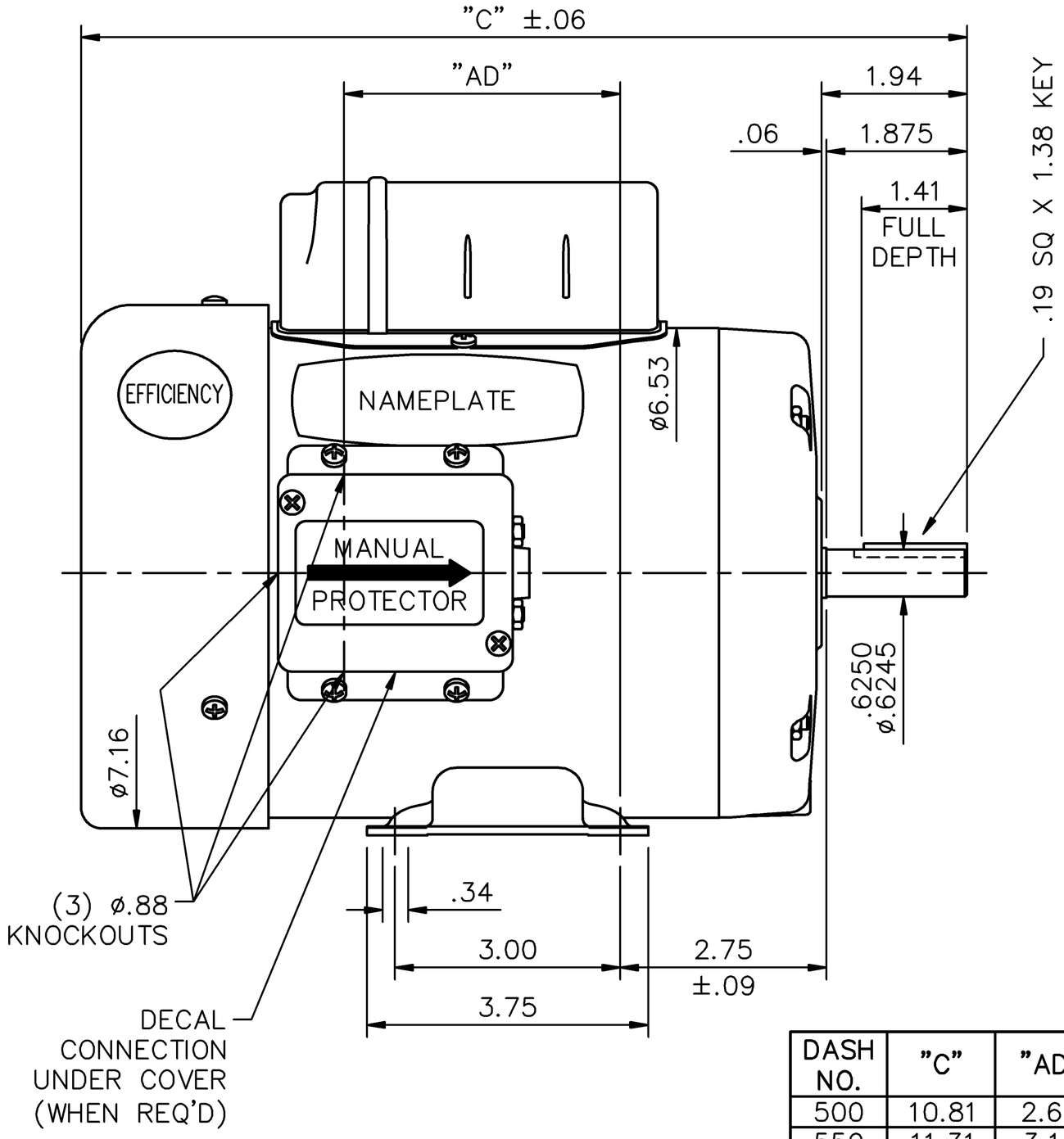

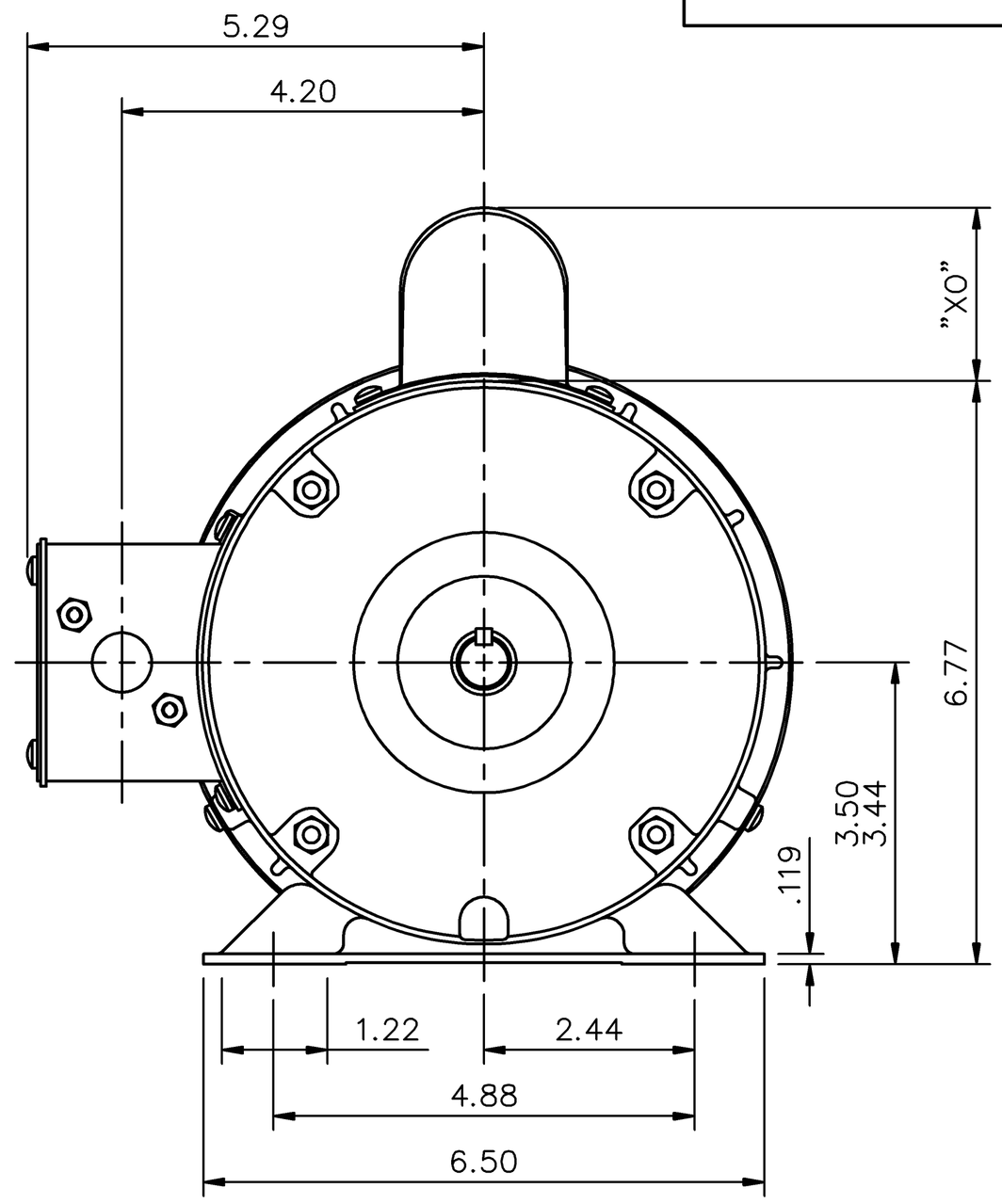

DASH NO.	"C"	"AD"
500	10.81	2.68
550	11.31	3.18
600	11.81	3.68
650	12.31	4.18

CAP. DASH	"XO"
A	1.54
B	2.01
C	2.25

GASKETS THROUGHOUT
MAXIMUM FACE RUNOUT TO BE .004 T.I.R.
MAXIMUM PILOT ECCENTRICITY TO BE .004 T.I.R.
PERMISSIBLE SHAFT RUNOUT TO BE .002 T.I.R.

NO.	REVISION	BY & DATE	CHK

TOLERANCES UNLESS SPECIFIED

DEC.	INCHES
.X	±.1
.XX	±.03
.XXX	±.005
.XXXX	±.0005
ANG	±1/2°

LEESON — ELECTRIC MOTORS GEARMOTORS AND DRIVES

TITLE: OUTLINE – 56 FRAME TEFC – RIGID

MAT'L.: GENERAL PURPOSE

FINISH

DRAWN	RDW 6/25/04
CHK	
APPD	SW 6/25/04
SCALE	3=8
REF	
FMF	
PREV	

THIS DRAWING IN DESIGN AND DETAIL IS OUR PROPERTY AND MUST NOT BE USED EXCEPT IN CONNECTION WITH OUR WORK ALL RIGHTS OF DESIGN AND INVENTION ARE RESERVED
THIS IS AN ELECTRONICALLY GENERATED DOCUMENT – DO NOT SCALE THIS PRINT

RFP 6/25/04
DIST

CAD FILE 028595

SIZE A

DRAWING NO. 028595

REV.