028657

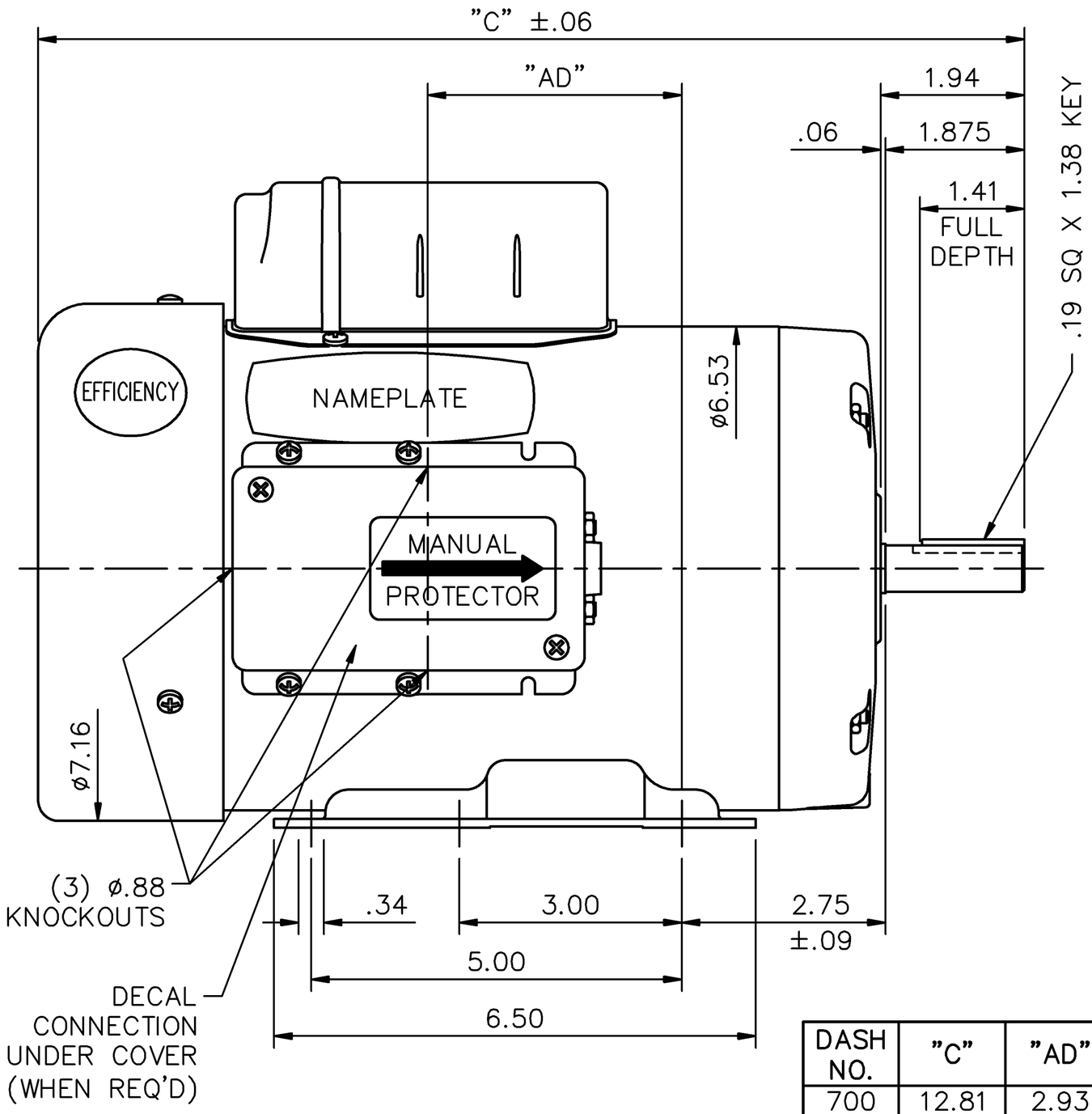

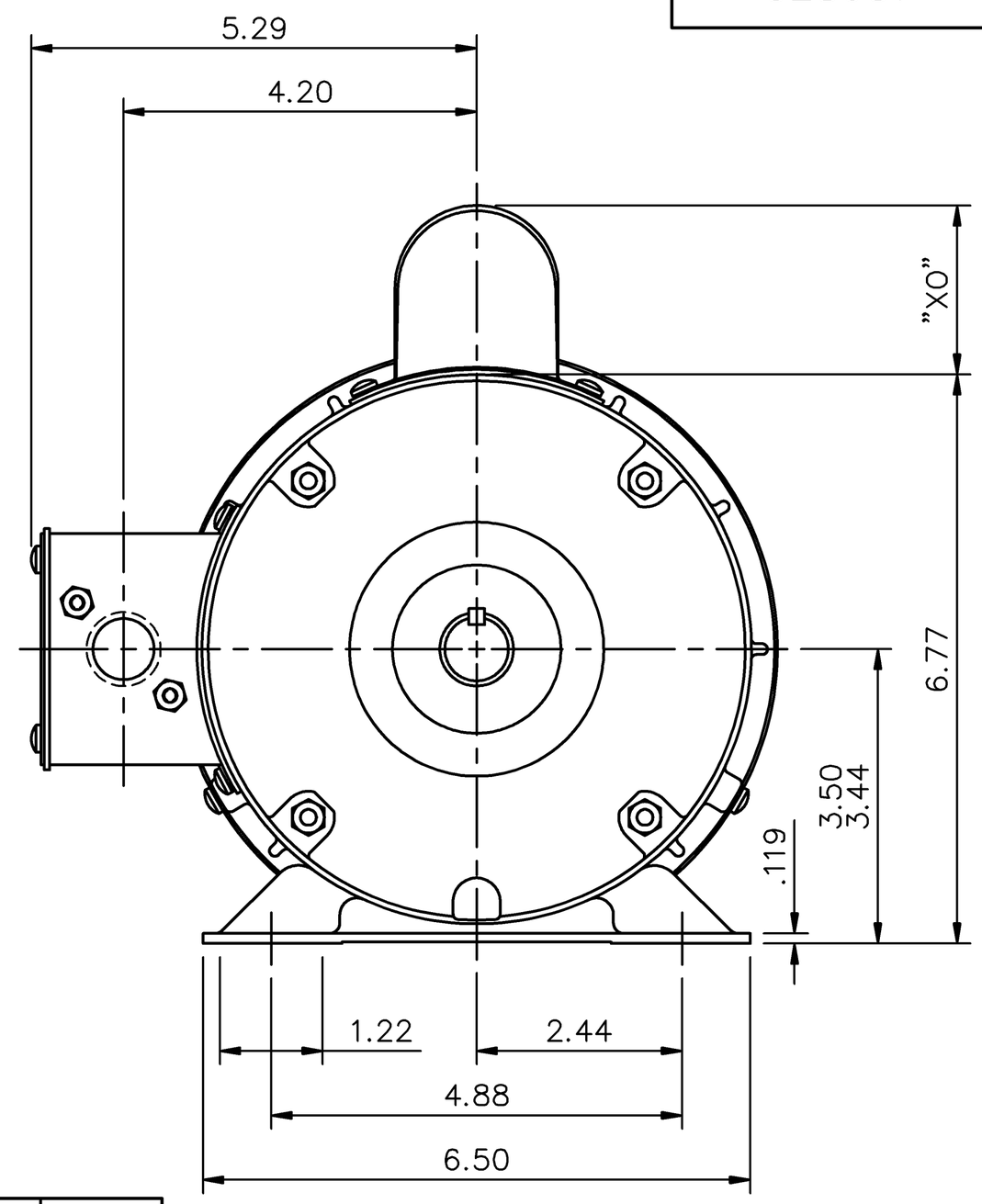

DASH NO.	"C"	"AD"
700	12.81	2.93
750	13.31	3.43
800	13.81	3.93
850	14.31	4.43

CAP. DASH	"XO"
A	1.54
B	2.01
C	2.25

GASKETS THROUGHOUT

NO.	REVISION	BY & DATE	CHK

TOLERANCES UNLESS SPECIFIED

DEC.	INCHES
.X	±.1
.XX	±.03
.XXX	±.005
.XXXX	±.0005
ANG	±1/2°

LEESON

ELECTRIC MOTORS
GEARMOTORS
AND DRIVES

TITLE OUTLINE – 56H FRAME
TEFC – RIGID

MAT'L. GENERAL PURPOSE

FINISH

DRAWN	RDW 11/11/04
CHK	
APPD	SW 11/11/04
SCALE	3=8
REF	
FMF	
PREV	

THIS DRAWING IN DESIGN AND DETAIL IS OUR PROPERTY AND MUST NOT BE USED EXCEPT IN CONNECTION WITH OUR WORK ALL RIGHTS OF DESIGN AND INVENTION ARE RESERVED
THIS IS AN ELECTRONICALLY GENERATED DOCUMENT – DO NOT SCALE THIS PRINT

RFP 11/11/04
DIST

CAD FILE 028657

SIZE A

DRAWING NO. 028657

REV.